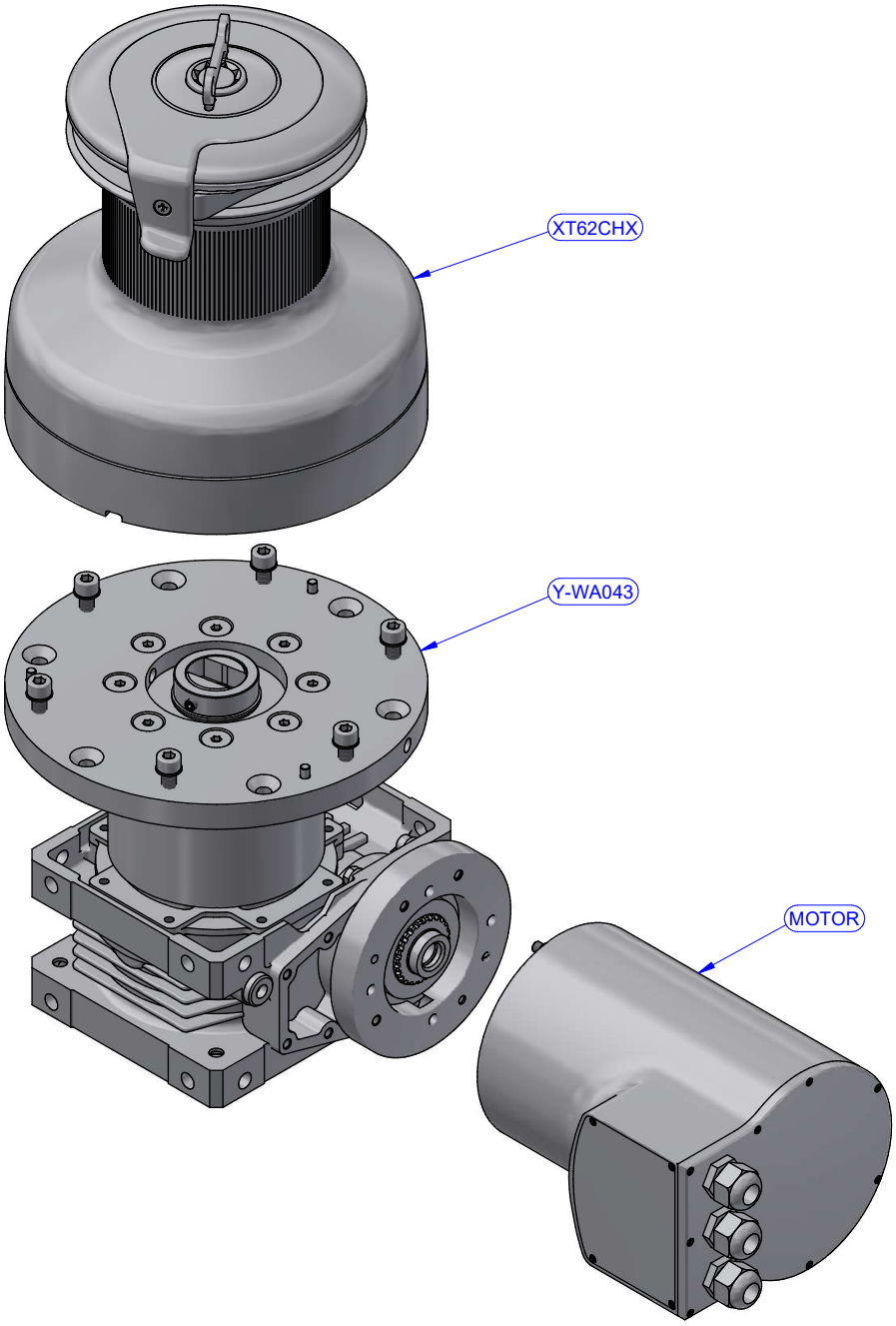

PART LIST			
CODE	DESCRIPTION	MATERIAL	Q.TY
XT62CHX	Winch	Various	1
Y-WA043	Disengagement box + Horizontal drive assy	Various	1

MOTOR		
CODE	DESCRIPTION	Q.TY
Y-W0418	1000W 12V	1
Y-W0419	1000W 24V	1
Y-W1377	1000W 48V	1

antal	Winch XT62 - Power 61,1:1 - 2 speeds - Chromed + Horizontal drive 1000W DESCRIPTION	XT62EH-CH MODEL CODE	22/11/2023 DATE	01 REV.
			17041423 DWG N.	1 / 8 PG.

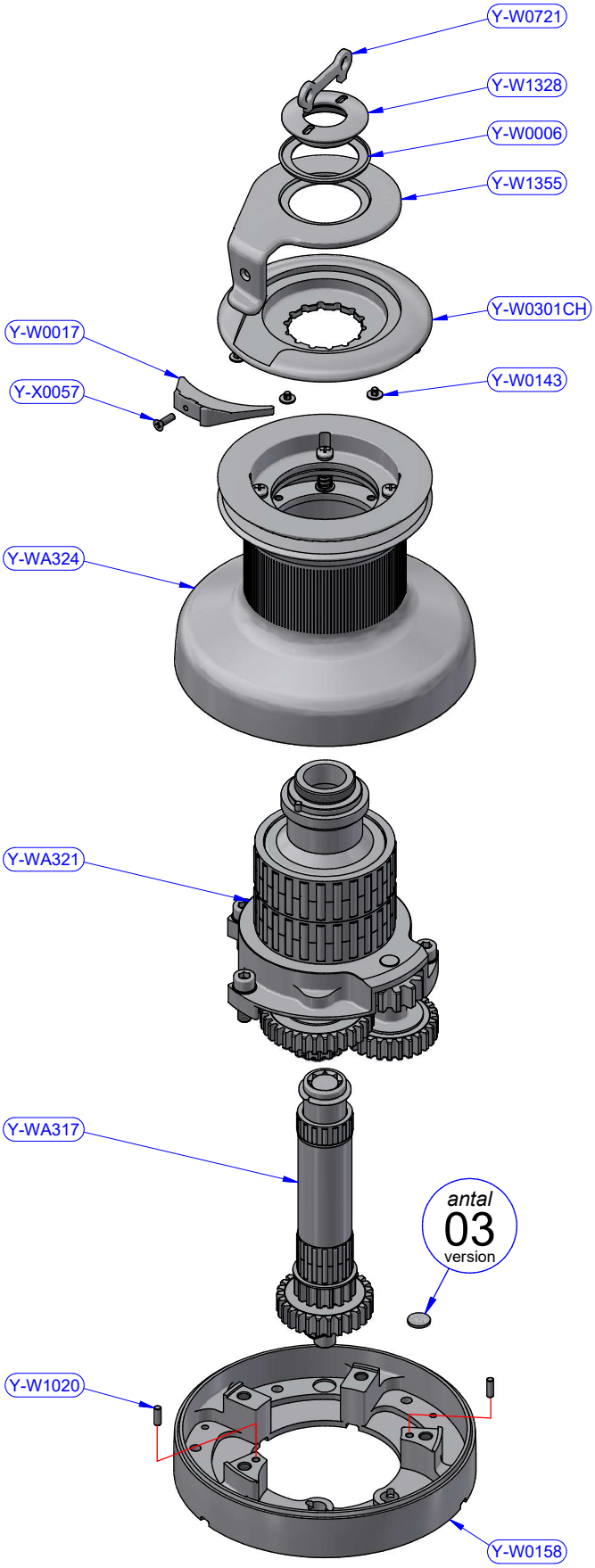

XT62CHX - PART LIST			
CODE	DESCRIPTION	MATERIAL	Q.TY
Y-W0006	Upper ring washer	Plastic	1
Y-W0017	Stripper	Plastic	1
Y-W0143	ST plug	Plastic	6
Y-W0158	Skirt	Aluminium	1
Y-W0301CH	Upper disk	Chromed brass	1
Y-W0721	Opening Tool	S.Steel	1
Y-W1020	Cylinder pin	S.Steel	2
Y-W1328	Upper cap	S.Steel	1
Y-W1355	Self-tailing arm	Chromed brass	1
Y-WA317	Main shaft assy	Various	1
Y-WA321	Base + Gears assy	Various	1
Y-WA324	Drum	Various	1
Y-X0057	Screw	S.Steel	1

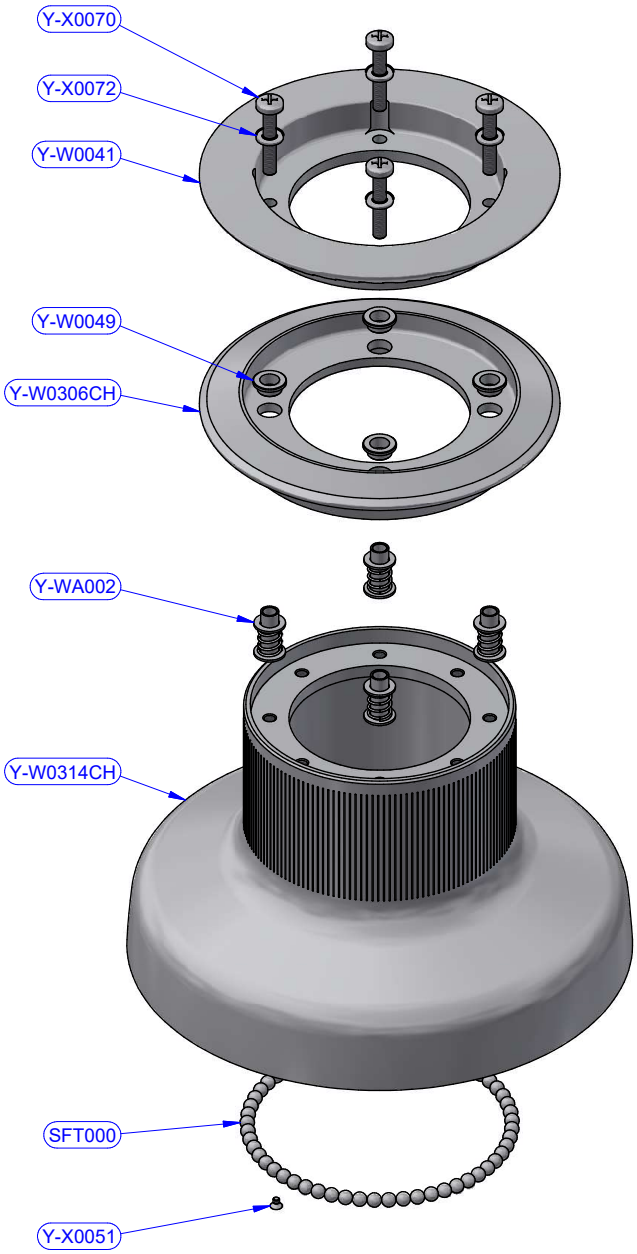

Y-WA324 - PART LIST			
CODE	DESCRIPTION	MATERIAL	Q.TY
SFT000	Torlon ball	Torlon	57
Y-W0041	ST central disk	Aluminium	1
Y-W0049	ST disk bush	Plastic	4
Y-W0306CH	ST lower disk	Chromed brass	1
Y-W0314CH	Drum	Chromed brass	1
Y-WA002	ST-spring assy	S.Steel	4
Y-X0051	Screw	S.Steel	1
Y-X0070	Screw	S.Steel	4
Y-X0072	S.Steel washer	S.Steel	4

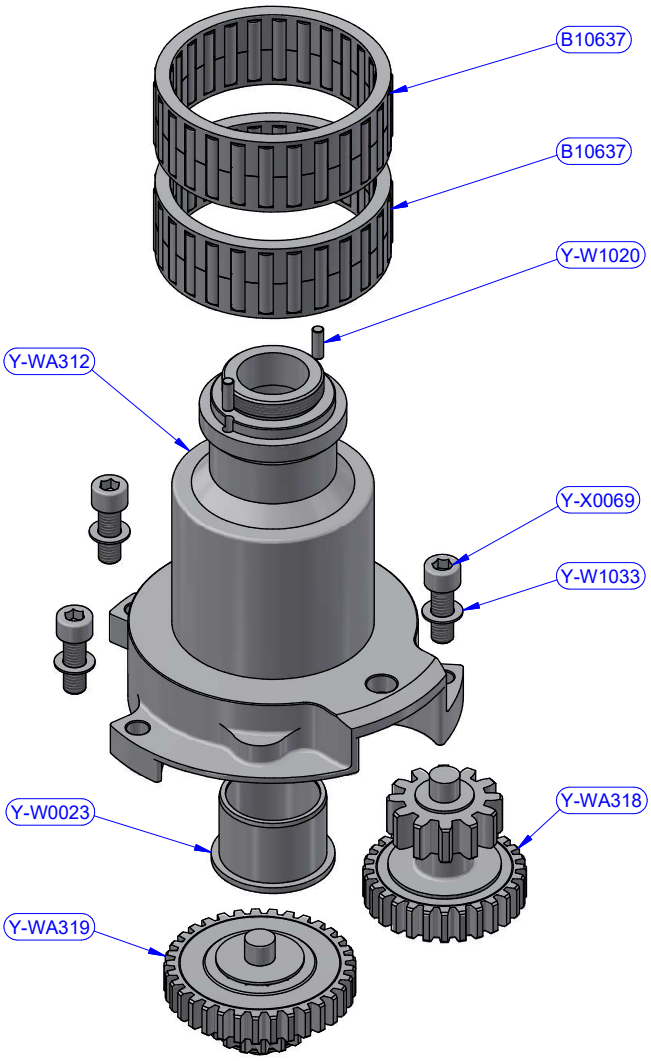

Y-WA321 - PART LIST			
CODE	DESCRIPTION	MATERIAL	Q.TY
B10637	Roller bearing	Plastic / S.Steel	2
Y-W0023	Bearing track	Plastic / S.Steel	1
Y-W1020	Cylinder pin	S.Steel	2
Y-W1033	S.steel washer	S.Steel	4
Y-WA312	Base + Stem	Various	1
Y-WA318	Gears kit	Various	1
Y-WA319	Gears kit	Various	1
Y-X0069	Screw	S.Steel	4

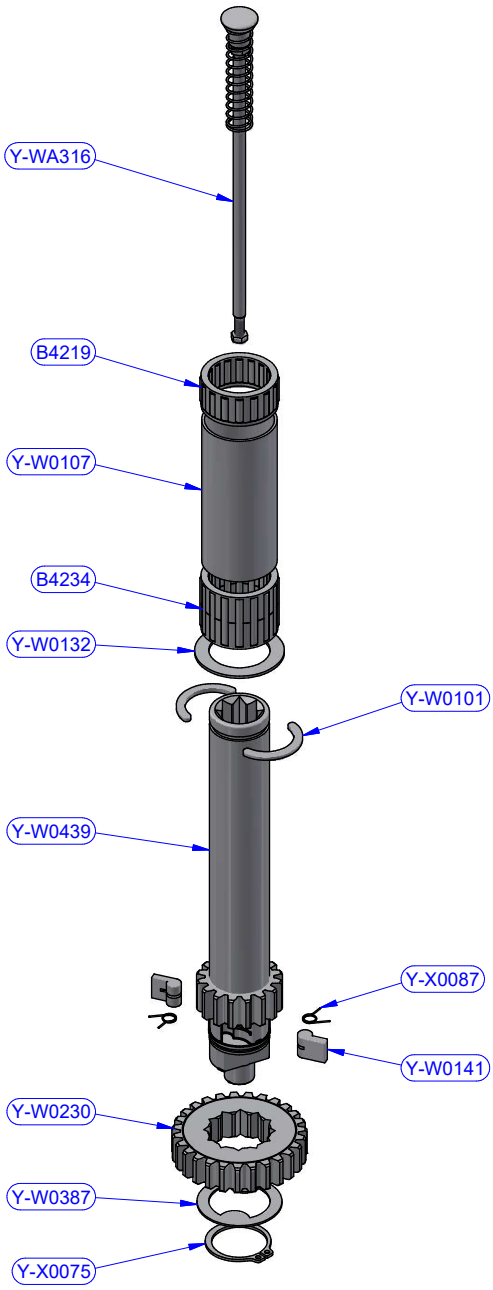

Y-WA317 - PART LIST			
CODE	DESCRIPTION	MATERIAL	Q.TY
B4219	Roller bearing	Plastic / S.Steel	1
B4234	Roller bearing	Plastic / S.Steel	1
Y-W0101	Half-ring	Brass	2
Y-W0107	Pipe spacer	Plastic	1
Y-W0132	S.Steel washer	S.Steel	1
Y-W0141	Pawl	S.Steel	2
Y-W0230	Gear "A2"	Bronze	1
Y-W0387	Special washer	S.Steel	1
Y-W0439	Main shaft	S.Steel	1
Y-WA316	Disengagement rod kit	S.Steel	1
Y-X0075	Seeger ring	S.Steel	1
Y-X0087	Torsion spring	S.Steel	2

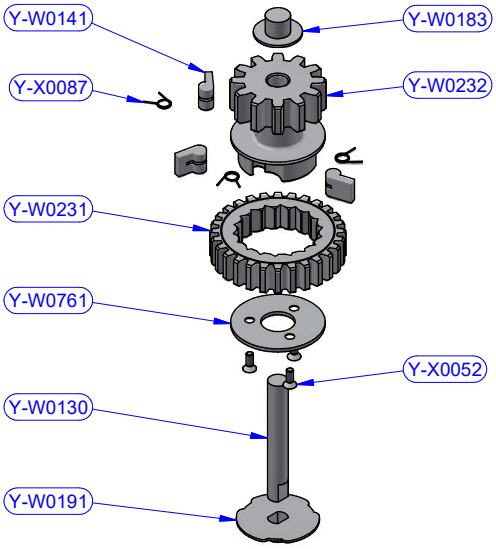

Y-WA318 - PART LIST			
CODE	DESCRIPTION	MATERIAL	Q.TY
Y-W0130	Gear axis	S.Steel	1
Y-W0141	Pawl	S.Steel	3
Y-W0183	Gear upper washer	Plastic	1
Y-W0191	Gear lower washer	Plastic	1
Y-W0231	Gear "B1"	Bronze	1
Y-W0232	Gear "B2"	Bronze	1
Y-W0761	Gear ring	S.Steel	1
Y-X0052	Screw	S.Steel	3
Y-X0087	Torsion spring	S.Steel	3

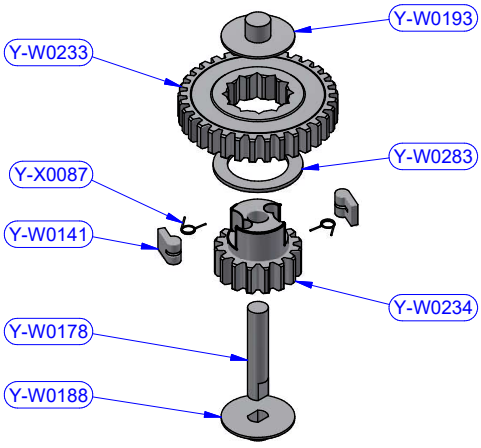

Y-WA319 - PART LIST			
CODE	DESCRIPTION	MATERIAL	Q.TY
Y-W0141	Pawl	S.Steel	2
Y-W0178	Gear axis	S.Steel	1
Y-W0188	Gear lower washer	Plastic	1
Y-W0193	Gear upper washer	Plastic	1
Y-W0233	Gear "D1"	Bronze	1
Y-W0234	Gear "D2"	Bronze	1
Y-W0283	S.steel washer	S.Steel	1
Y-X0087	Torsion spring	S.Steel	2

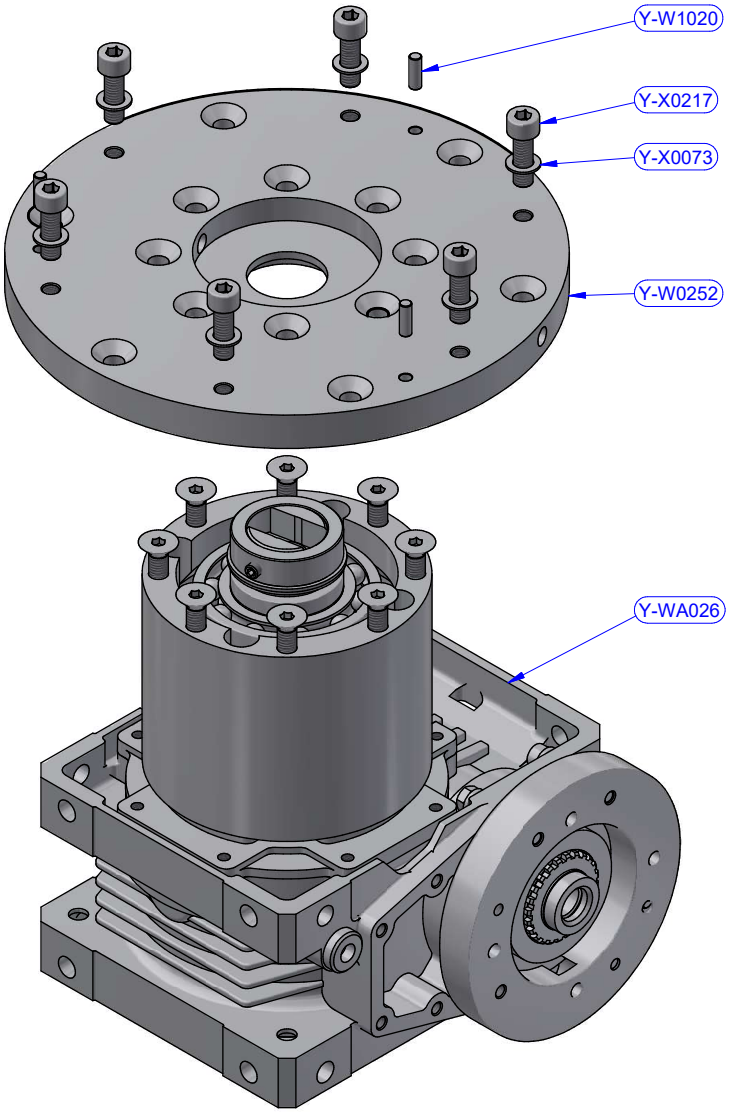

Y-WA043 - PART LIST			
CODE	DESCRIPTION	MATERIAL	Q.TY
Y-W0252	Skirt flange	Aluminium	1
Y-W1020	Cylinder pin	S.Steel	3
Y-WA026	Disengagement box + Horizontal drive assy	Various	1
Y-X0073	S.Steel washer	S.Steel	6
Y-X0217	Screw	S.Steel	6

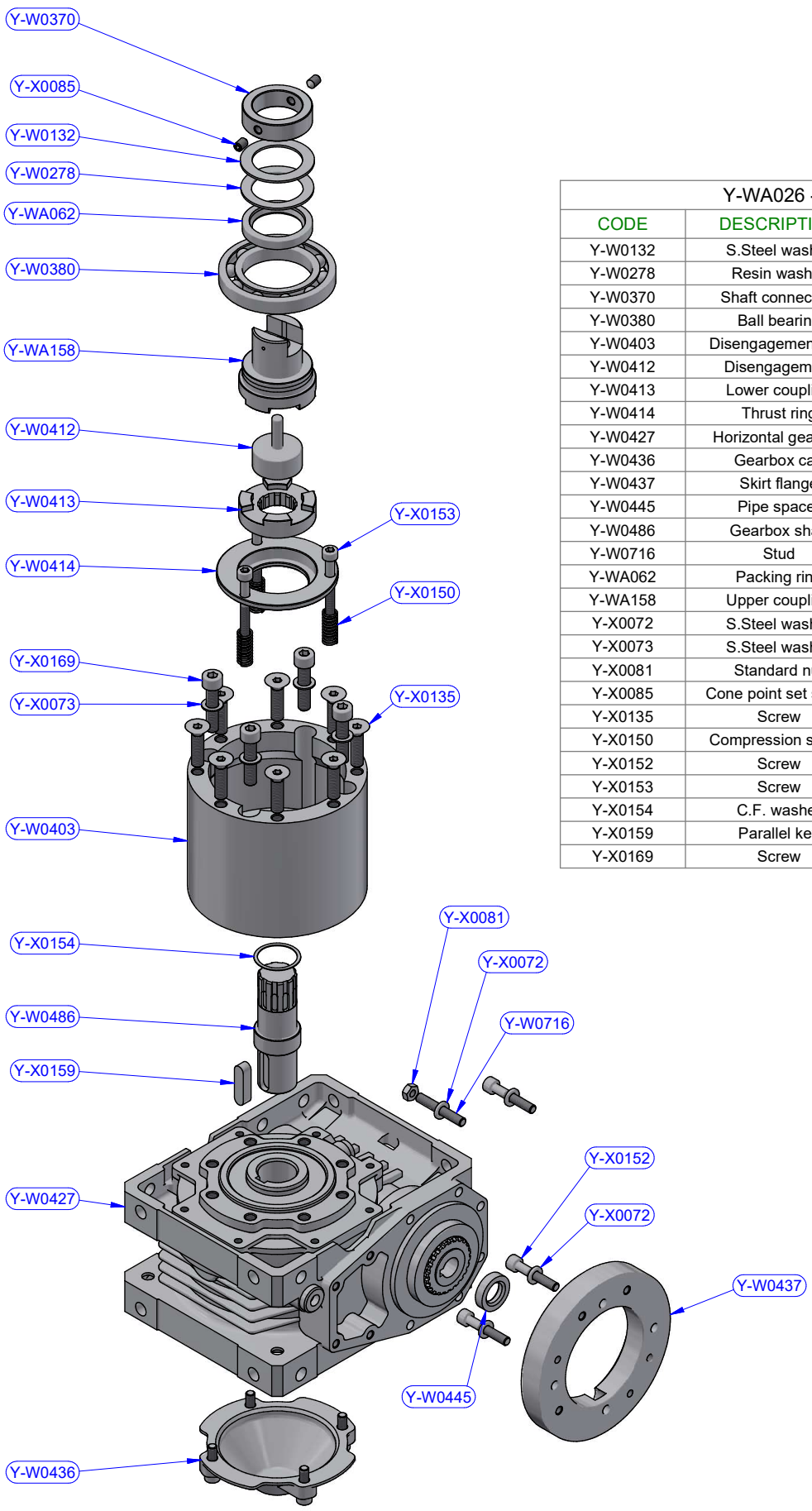

Y-WA026 - PART LIST			
CODE	DESCRIPTION	MATERIAL	Q.TY
Y-W0132	S.Steel washer	S.Steel	1
Y-W0278	Resin washer	Resin	1
Y-W0370	Shaft connection	S.Steel	1
Y-W0380	Ball bearing	S.Steel	1
Y-W0403	Disengagement box	Aluminium	1
Y-W0412	Disengagement	Bronze	1
Y-W0413	Lower coupling	S.Steel	1
Y-W0414	Thrust ring	Bronze	1
Y-W0427	Horizontal gearbox	Various	1
Y-W0436	Gearbox cap	Plastic	1
Y-W0437	Skirt flange	Aluminium	1
Y-W0445	Pipe spacer	POM-C	1
Y-W0486	Gearbox shaft	Bronze	1
Y-W0716	Stud	S.Steel	1
Y-WA062	Packing ring	Rubber	1
Y-WA158	Upper coupling	Various	1
Y-X0072	S.Steel washer	S.Steel	4
Y-X0073	S.Steel washer	S.Steel	4
Y-X0081	Standard nut	S.Steel	1
Y-X0085	Cone point set screw	S.Steel	2
Y-X0135	Screw	S.Steel	8
Y-X0150	Compression spring	S.Steel	3
Y-X0152	Screw	S.Steel	3
Y-X0153	Screw	S.Steel	3
Y-X0154	C.F. washer	Tufnol	1
Y-X0159	Parallel key	S.Steel	1
Y-X0169	Screw	S.Steel	4